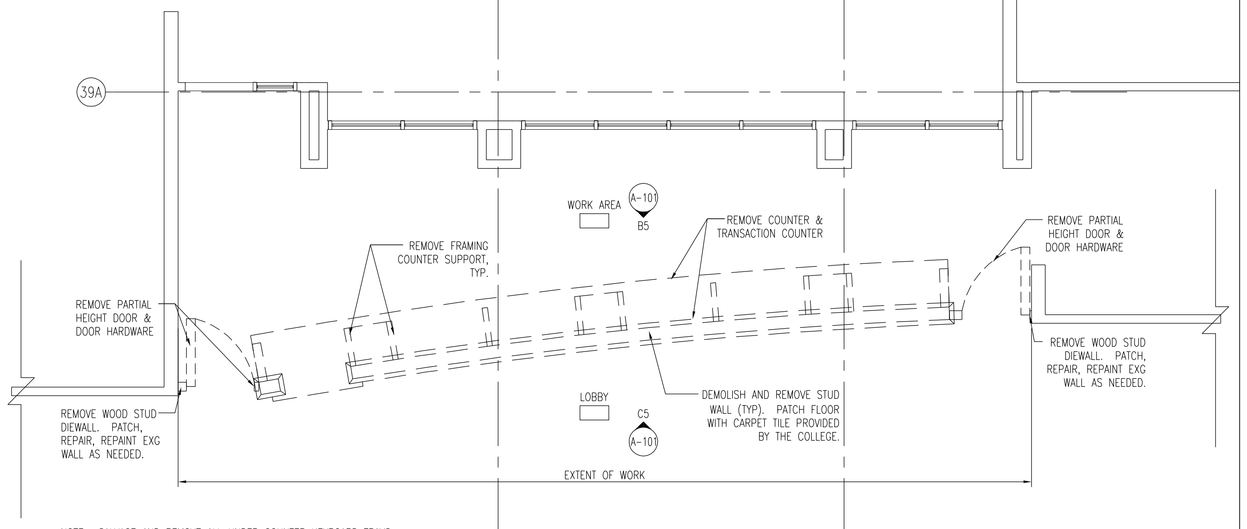

NOTE: SALVAGE AND REMOVE ALL UNDER COUNTER KEYBOARD TRAYS.

D5 DEMOLITION PLAN

1/4" = 1'-0"

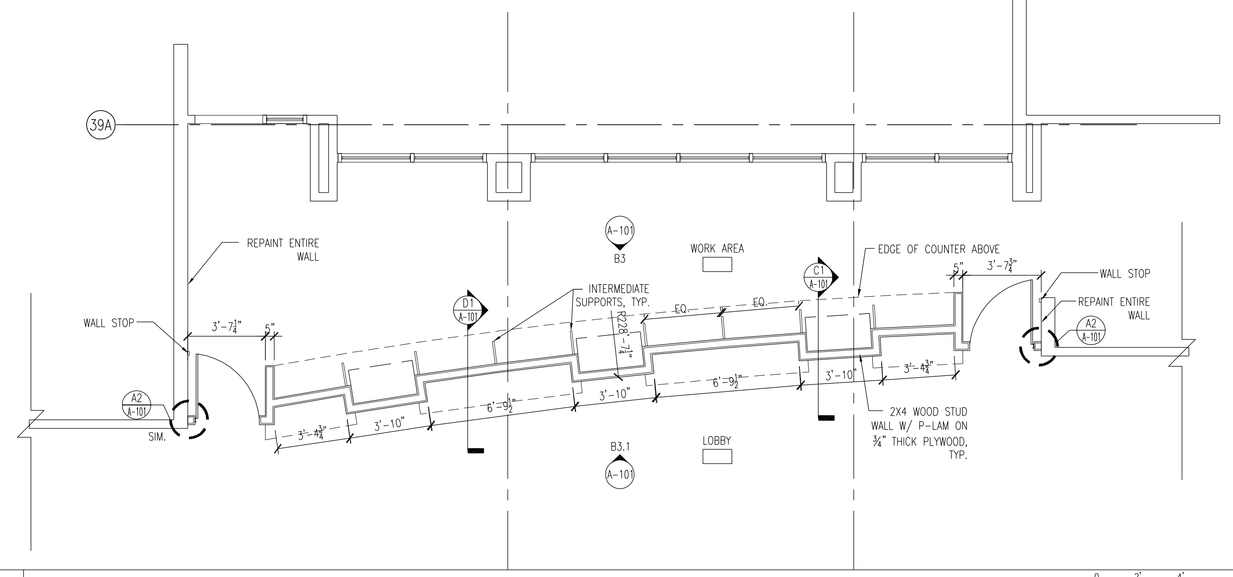

D3 FLOOR PLAN

1/4" = 1'-0"

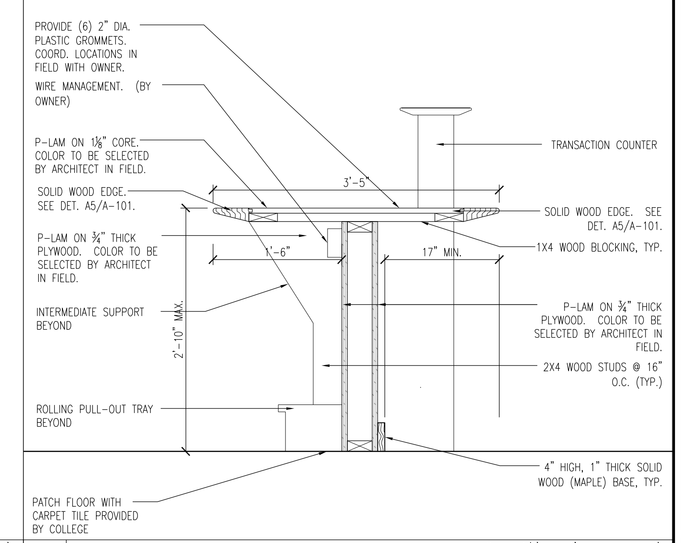

D1 SECTION @ LOW WALL

0 1/2" 1" 2"
1" = 1'-0"

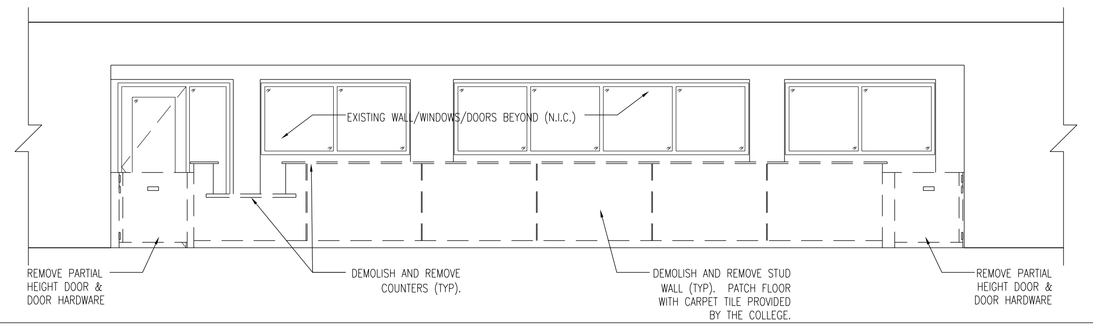

C5 DEMOLITION INTERIOR ELEVATION LOOKING FROM LOBBY

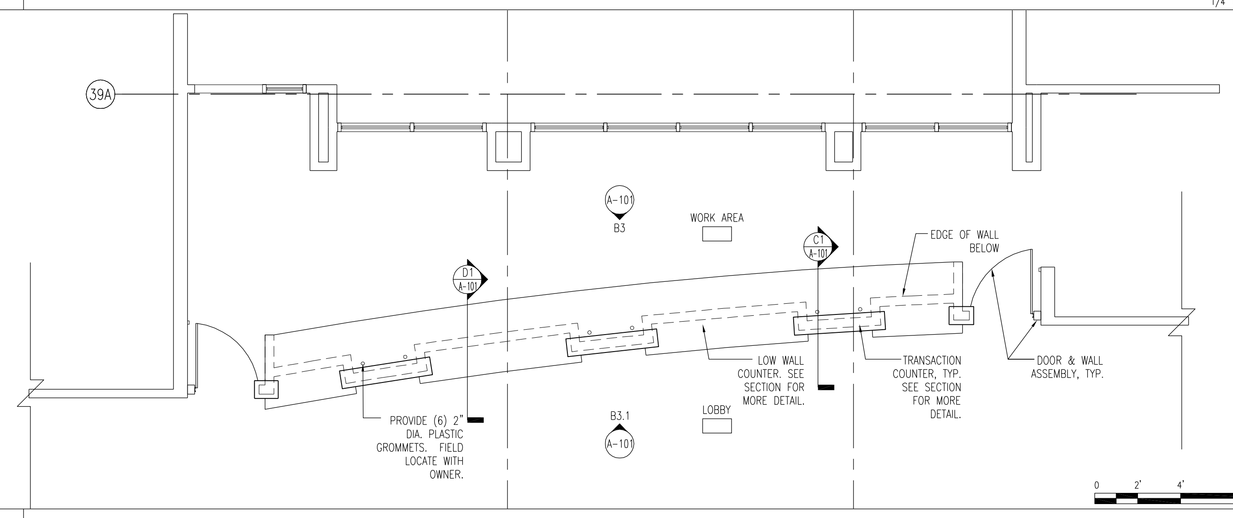

C3 COUNTER PLAN

1/4" = 1'-0"

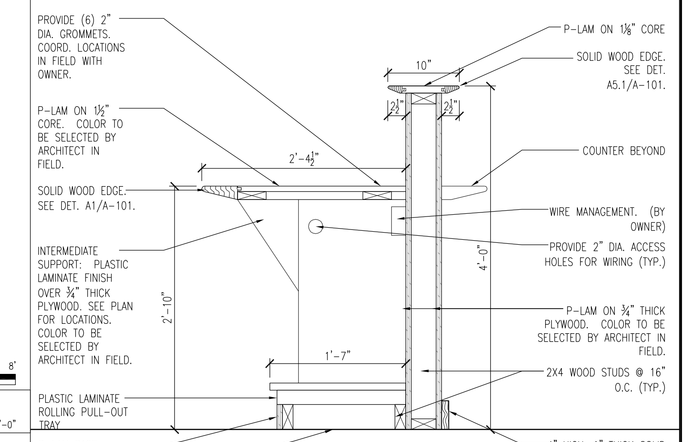

C1 SECTION @ TRANSACTION COUNTER

0 1/2" 1" 2"
1" = 1'-0"

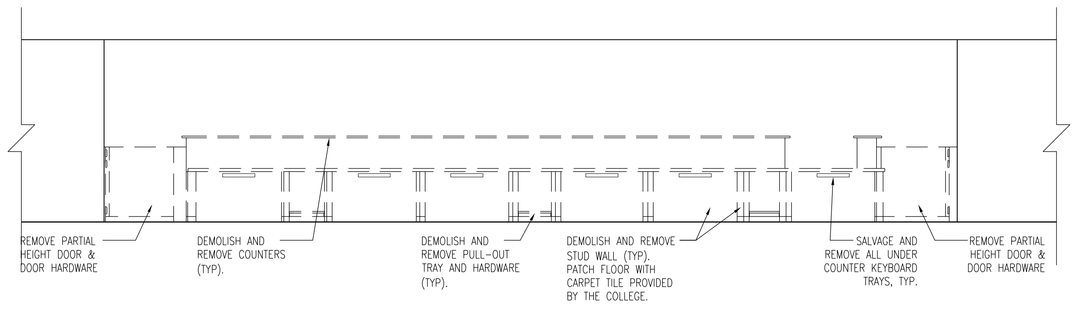

B5 DEMOLITION INTERIOR ELEVATION LOOKING FROM WORK AREA

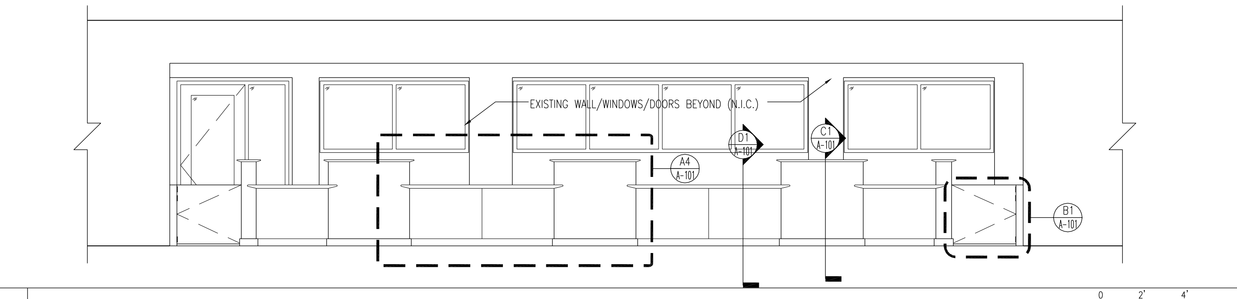

B3.1 INTERIOR ELEVATION

1/4" = 1'-0"

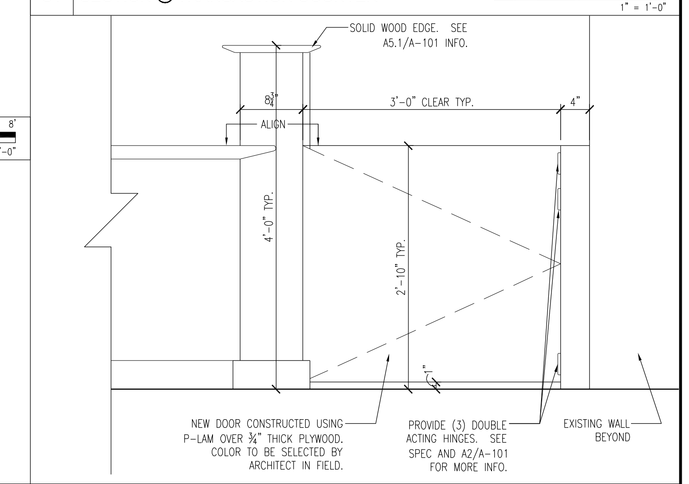

B1 PARTIAL ELEVATION @ DOOR

0 1/2" 1" 2"
1" = 1'-0"

GENERAL DEMOLITION NOTES:

1. THE OWNER HAS THE RIGHT OF FIRST REFUSAL FOR ALL EQUIPMENT AND FIXTURES (CABINETS, SHELVING, ETC.) REMOVED UNDER CONTRACT. IF THE OWNER DOES NOT EXERCISE THIS RIGHT FOR AN INDIVIDUAL PIECE OF EQUIPMENT, THE GENERAL CONTRACTOR SHALL REMOVE SAID EQUIPMENT FROM SITE.

2. MARK LOCATION OF ALL UTILITIES TO REMAIN PRIOR TO DEMOLITION.

3. NOTIFY ARCHITECT/OWNER PRIOR TO START OF DEMOLITION WORK.

5. MAINTAIN PROTECTED EGRESS AND ACCESS TO WORK.

6. DISCONNECT, CAP AND IDENTIFY DESIGNATED UTILITIES WITHIN DEMOLITION AREAS.

8. REMOVE ALL DEMOLISHED MATERIALS FROM SITE AND LEGALLY DISPOSE.

9. UTILIZE OSHA SAFETY PRECAUTIONS AS REQUIRED.

10. ALL EQUIPMENT MUST MEET LOCAL NOISE ORDINANCES.

11. ITEMS SHOWN TO BE DEMOLISHED ON PLAN ARE FOR REFERENCE ONLY. THE CONTRACTOR MUST INSPECT THE SITE AND COMPLETELY FAMILIARIZE HIM/HERSELF WITH THE ITEMS TO BE REMOVED. QUESTIONS ABOUT ITEMS TO BE REMOVED OR TO REMAIN MUST BE GIVEN TO THE ARCHITECT IN WRITING PRIOR TO PROVIDING BIDS.

12. NOTIFY ARCHITECT IMMEDIATELY OF ANY DISCREPANCY OR DEVIATION BETWEEN DWGS. AND ANY FIELD VERIFIED CONDITIONS PRIOR TO COMMENCING WORK.

13. DO NOT SCALE DWGS. ALL MEASUREMENTS MUST BE CONFIRMED IN FIELD. DIMENSIONS SHOWN ARE FOR REFERENCE ONLY.

14. THE CONTRACTOR SHALL MAKE EVERY EFFORT TO PROTECT PORTIONS OF EXISTING CONSTRUCTION WHICH ARE ADJACENT TO AREAS TO BE DEMOLISHED. MAKE ALL CUTS AS NEATLY AS POSSIBLE.

15. THE GENERAL CONTRACTOR SHALL PROVIDE A PHYSICAL BARRIER TO CONTAIN DUST AROUND THE DEMOLITION AREA AND SHALL MAKE EVERY EFFORT TO KEEP THE DEMOLITION SITE AND SURROUNDING AREAS AS CLEAN AS POSSIBLE.

16. EACH CONTRACTOR SHALL PROVIDE ADEQUATE FIRE PROTECTION DURING THE COURSE OF THE WORK IN ACCORDANCE WITH THE GENERAL REQUIREMENTS AND AUTHORITIES HAVING JURISDICTION.

17. ALL EXISTING LOOSE FURNITURE IN SCHEDULED AREAS OF DEMOLITION SHALL BE TURNED OVER TO THE OWNER PRIOR TO DEMOLITION. TYPICAL.

18. ALL EXISTING WALL MOUNTED DIRECTIONAL SIGNAGE, PAMPHLET HOLDERS OR OTHER ROOM SIGNAGE IN SCHEDULED AREAS OF DEMOLITION SHALL BE TURNED OVER TO THE OWNER PRIOR TO DEMOLITION. TYPICAL.

19. GENERAL CONTRACTOR TO SURVEY ALL FLOOR RECEPTICALS REMOVE AND IN-FILL. E.C. TO MAKE ALL AREAS SAFE PRIOR TO REMOVAL. TYPICAL.

B5 DEMOLITION NOTES

Product Specifications:
Manufacturer: Bommer
Manufacturer Location: USA
Collection: Bommer 3029 Series
Color/Finish: zinc
Material: steel
Style: traditional
Type: double acting spring hinge
Delivery Time: 5 to 10 business days
Warranty: 1 year limited warranty. Includes necessary mounting hardware.
Height: 3" (76mm)

Additional Information:

- Door Weight: 35lbs.(2 hinges); 39lbs (3 hinges).
- Door Width: 24in.(2 hinges); 32in.(3 hinges)
- Door Thickness: 3/4in. to 1in.
- Door Height: 60in. (Minimum height for width and weight shown. Hinge capacity decreases as door height decreases.)
- Door flange is mortised into edge of door.
- Jamb flange is surface applied to jamb.
- Non-template hole pattern.
- Non-handed.
- NOTE: Do not use on doors with hinge edge beveled.
- Supplied with all wood screws.

B2 DOOR HINGE SPECIFICATION

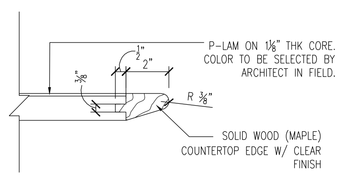

A5.1 COUNTERTOP EDGE DETAIL @ TRANSACTION COUNTER

0 3" 6" 9"
3" = 1'-0"

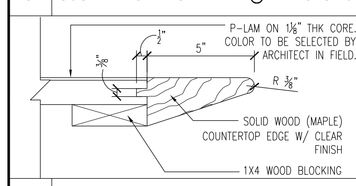

A5 COUNTERTOP EDGE DETAIL @ DESK

0 3" 6" 9"
3" = 1'-0"

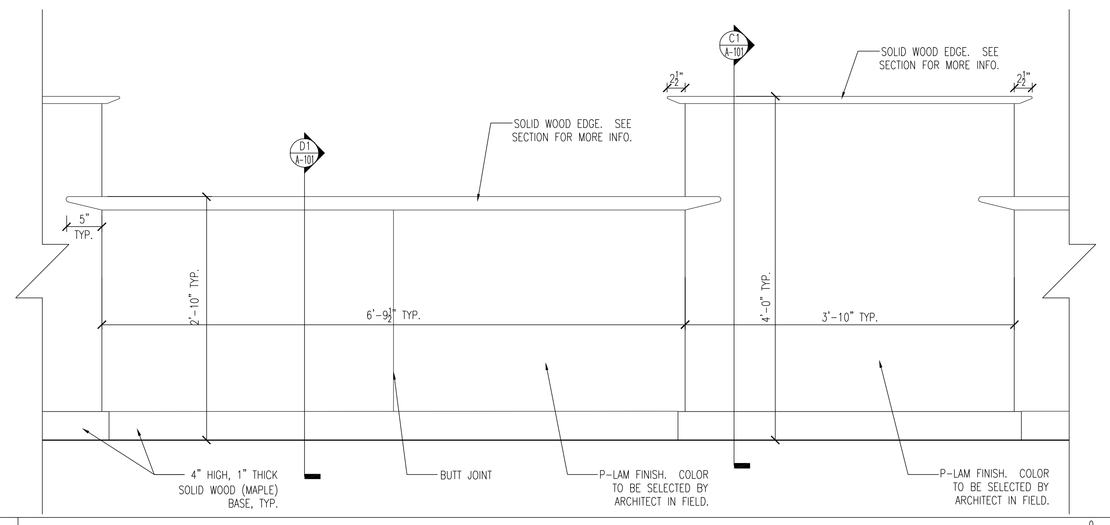

A4 PARTIAL ELEVATION @ COUNTERS

0 1/2" 1" 2"
1" = 1'-0"

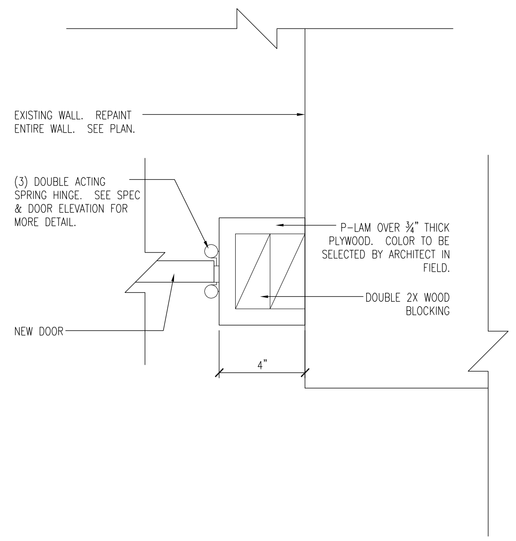

A2 DOOR HINGE DETAIL

0 3" 6" 9"
3" = 1'-0"

SCOPE OF WORK:

THIS PROJECT IS TO INCLUDE THE FOLLOWING:

- DEMOLITION AND REMOVAL OF EXISTING REGISTRATION DESK IN ITS ENTIRETY, INCLUDING THE TWO HALF HEIGHT DOORS.
- REPLACEMENT/PATCH OF EXISTING CARPET DAMAGED AND OR MISSING DUE TO THE REMOVAL OF THE EXISTING DESK.
- REPLACEMENT IN KIND OF REGISTRATION DESK. REFER TO CONSTRUCTION DOCUMENTS FOR PLAN, SECTIONS, ELEVATIONS, AND DETAILS.
- EXISTING DOORS, WINDOWS, WALLS BEYOND DESK ARE NOT IN THIS CONTRACT UNLESS NOTED ON THE CONSTRUCTION DOCUMENTS. PROTECT THESE AREAS DURING DEMOLITION/CONSTRUCTION. ANY DAMAGE TO THESE AREAS DURING DEMOLITION AND/OR CONSTRUCTION WILL BE THE RESPONSIBILITY OF THE CONTRACTOR TO REPLACE IN KIND.

A1 SCOPE OF WORK

Clarke Caton Hintz
Architecture
Planning
Landscape Architecture
400 Sullivan Way
Trenton, NJ 08628
tel: (609) 883-8383
fax: (609) 883-4044
www.clarkecatonhintz.com

Drawings Copyright © 2008 Clarke Caton Hintz, PC

OWNER:
Brookdale Community College
765 Newman Spring Road
Lincroft, NJ 07738

SUBMISSIONS		
NO.	DATE	DESCRIPTION

REVISIONS

00/00/00

ARCHITECT
NJ LICENSE NO 21AI00636900
JOHN P. CLARKE, FAIA
DATE

New Registration Desk
@ Center for Admissions and
Registration Building
Brookdale Community College
Lincroft, NJ

DATE:	2/23/09
SCALE:	1/8" = 1'-0"
DRAWN BY:	LMF
CHECKED BY:	MH

SHEET TITLE:
-

DRAWING NO.:
A-101

CCH PROJECT NO: 1621

1239001375132\1
A lfischer K:\1600\1621_Brookdale Desk\DWGS\4-CD\Sheets\A-101.dwg